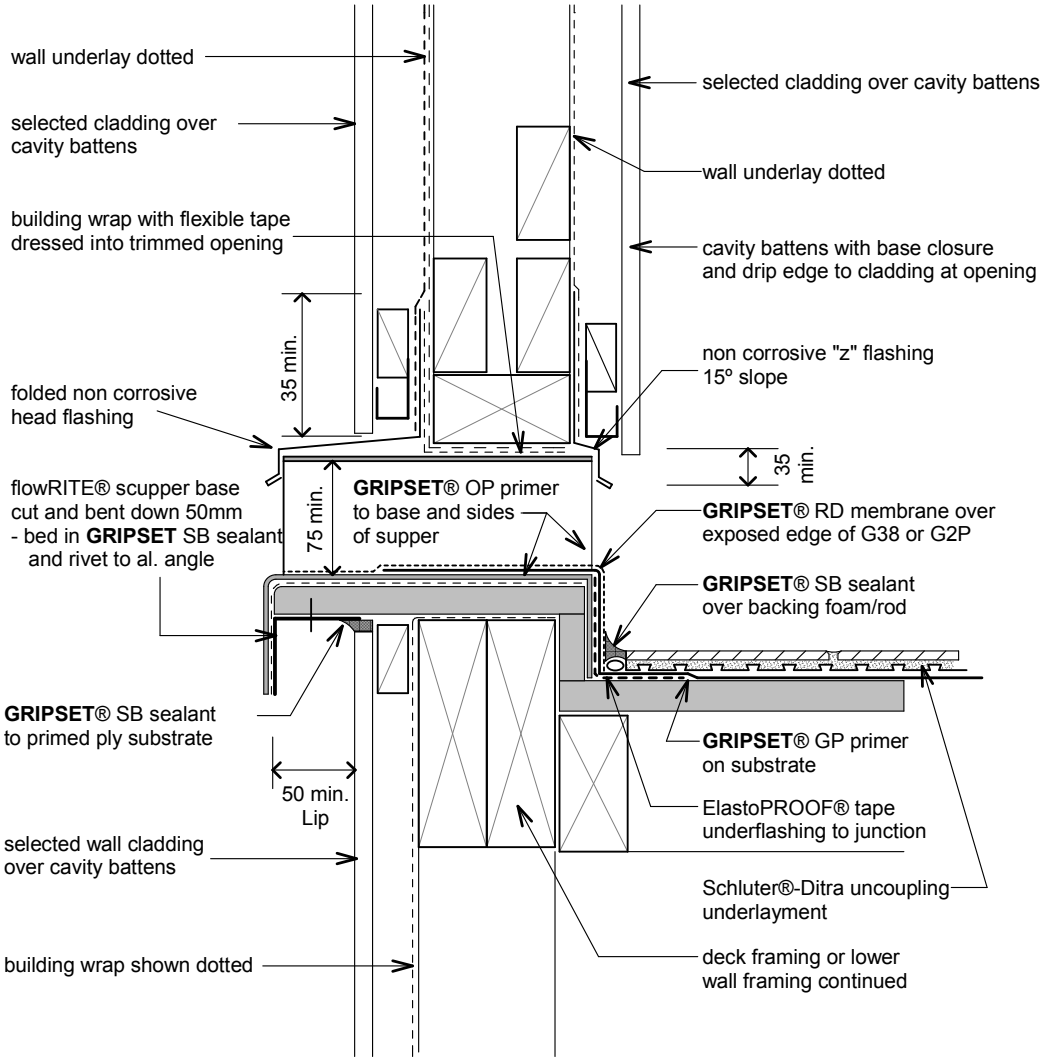


# gsM-D08 - Scupper Overflow Section 2

Revision: 10 Nov 2014