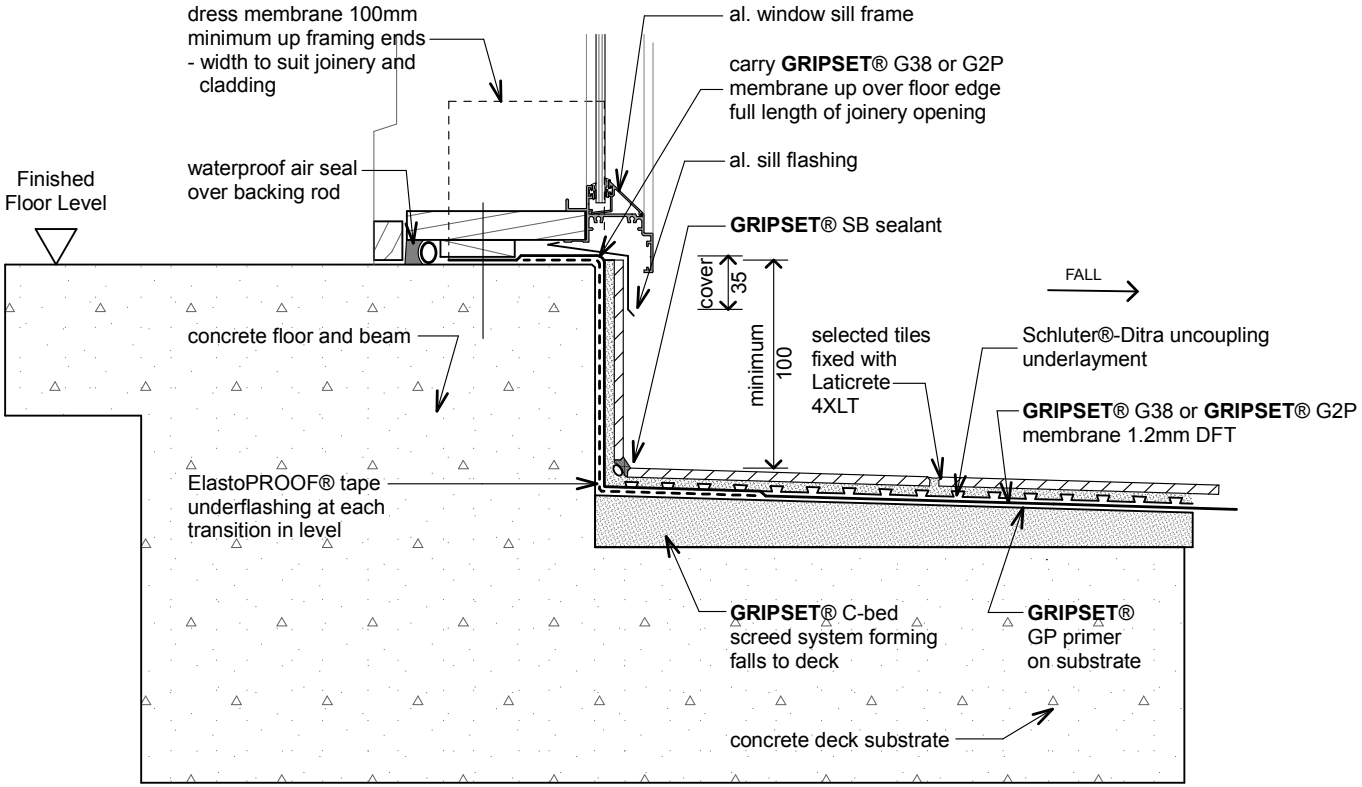

gsM-D14 - Window Sill/ Tiles (concrete substrate)-junction - type 3

Revision: 10 Nov 2014