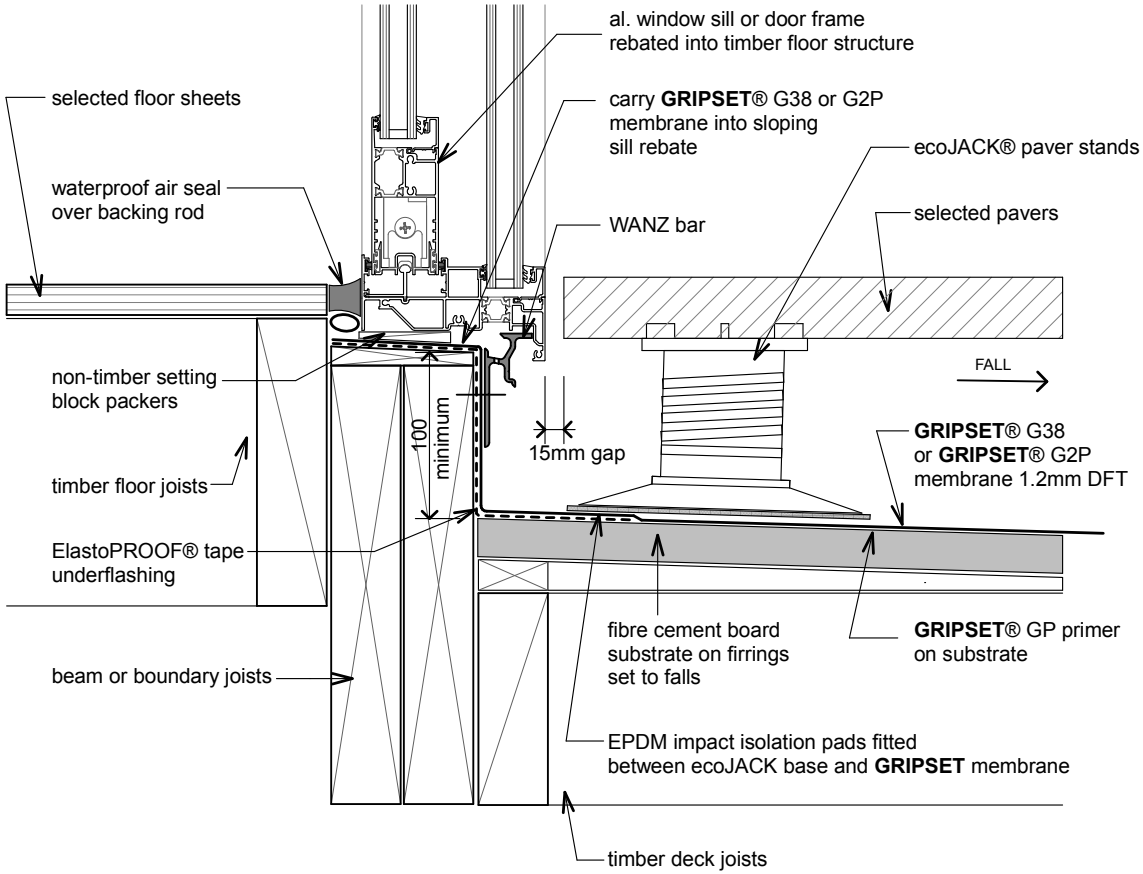

gsM-D21 - ecoJACK® paver-threshold detail - type 1

Revision: 10 Nov 2014