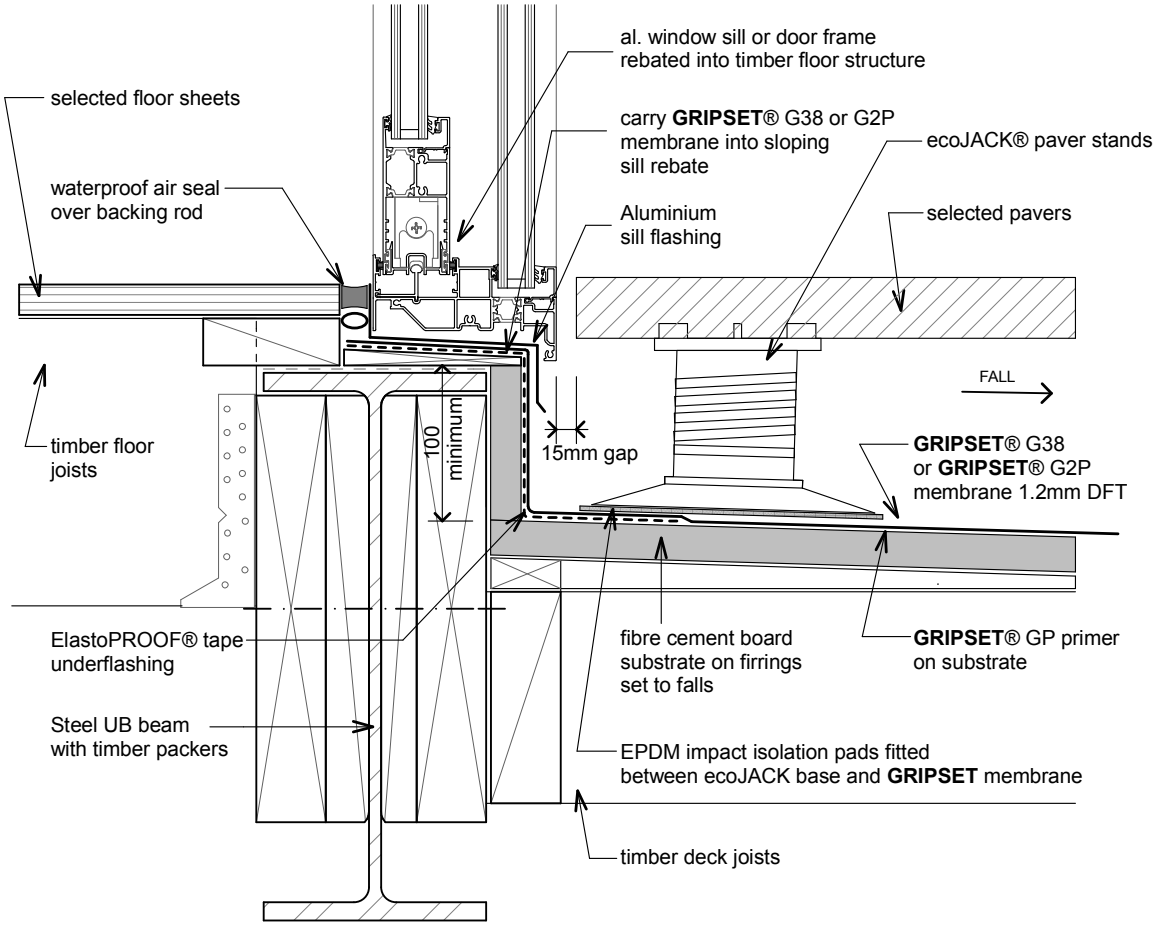

gsM-D22 - ecoJACK® paver-threshold detail - type 2

Revision: 10 Nov 2014