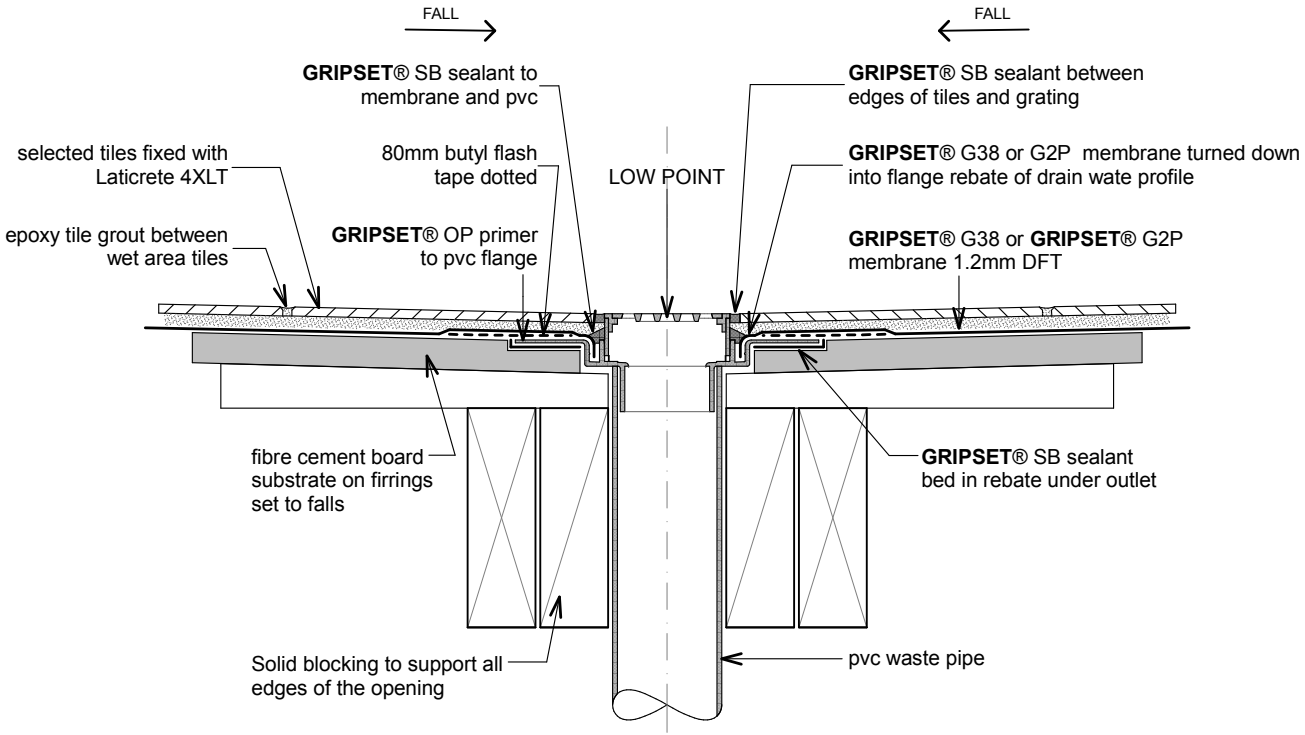

gsM-S09 - drainRITE® Water Outlet Type 6 - Internal Wet Area (timber)

Revision: 10 Nov 2014